Product code: WDY-SCPB
EAN: 5902539892741

OMNIRES

Y | wall-mounted bath spout

Finish: brushed copper (CPB)

Certificates: Polish Declaration of Performance (B marking), Polish Hygienic Certificate PZH



Technologies

Aerators and shower heads with the AIR WATER technology inject air into the water making it soft and pleasant to the touch. Water stream is quiet and consistent.

Coatings applied using advanced PVD technology guarantee the highest possible durability and effortless cleaning.

The fittings and accessories made of high-quality A-grade brass are characterized by their exceptional durability and precisely crafted design. The strictly controlled material composition ensures the highest level of safety during everyday use of the product.

Flow characteristics

- water flow at 3 bar: 30 l/min
- hot water supply: max. 90 °C
- working pressure 1-5 bar
- Acoustic group: U
- Flow rate class: D

Specification

- brass
- spout reach: 16 cm
- rosette dimensions: ø8 cm
- 1/2” water connection

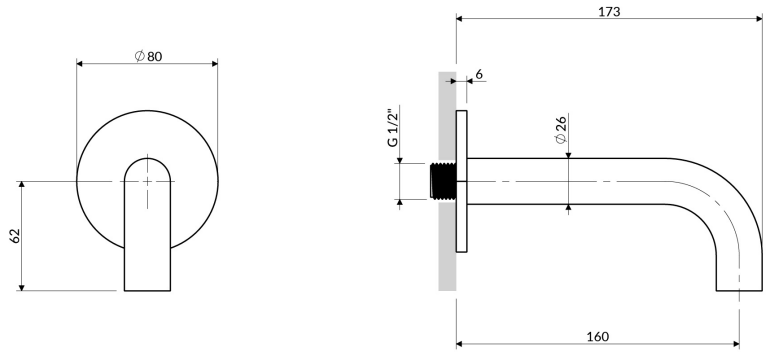
∅80
62
173
6
G 1/2"
∅26
160