Product code: SYSY11-N-6CR
EAN: 5901867772596

OMNIRES

UNI | thermostatic shower system for exposed installation

Finish: polished chrome (CR)

The OMNIRES UNI collection stands out for its multifunctionality, offering practical solutions that enhance everyday comfort. With the option to switch between a shower head and a hand shower featuring three types of water stream – rain, whip, and mixed – every shower experience can be tailored to individual preferences.

Chrome is a versatile finishing in a silvery colour, with the perfectly even and lustrous surface.

Technologies

The mixer is equipped with the highest quality ceramic cartridge which ensures smooth and precise water flow control whilst guaranteeing long term product performance.

Thanks to the AIR WATER technology, the water is soft and pleasant to the touch, enhancing the overall showring experience.

The EASY CLEAN nozzles allow the user to easily remove any limescale from the shower head and the hand shower by simply wiping their silicone surface.

The mixer's body, the valve and the rosette are all made of high quality A-grade brass.

Developed to minimise environmental footprint, the ECO WATER technology reduces water consumption by approx. 30% without compromising on the overall product experience.

The shower head is made using the ANTI-SCALE technology. It incorporates a silicone insert that prevents internal water stagnation. Occasional tilting of the shower head, so that any stagnant water could flow out through the nozzles, guarantees long term product performance.

The product's coating, made using advanced galvanization technology, is durable and easy to clean.

Flow characteristics

- hot water supply: max. 90 °C
- working pressure 1-5 bar

Specification

- thermostatic shower mixer
- hot water lock at 38°C
- shower head (WGR225CR), dimensions: 25 x 25 cm, reach from the wall: 42 cm
- hand shower (JIMJIM-RCR), 3-function
- stainless steel flexible shower hose, length: 150 cm
- shower head/hand shower stream switch embedded in the water knob
- adjustable height, minimum/maximum system height: 90 cm/130 cm

Product care

HOW TO TAKE CARE OF BATHROOM AND KITCHEN FITTINGS?

You should clean your bathroom and kitchen fittings regularly, preferably after each use, so as to prevent the build-up of hard-to-remove dirt. For daily maintenance of external surfaces, use a soft cloth (for example, a microfibre cloth) and a solution of water with a mild cleaning agent with a natural composition. Hard-to-reach recesses and milled details can be gently cleaned with a soft brush. Then rinse the product thoroughly with clean water and wipe it dry. It is not recommended to use rough or abrasive materials and corrosive or bleaching substances to prevent damaging the surface of the product.

For more stubborn dirt, use a 10% citric acid solution with water. Apply this solution directly to the product or cover the product with a cloth soaked in the solution. After 10 minutes, rinse the product thoroughly with clean water and wipe it dry. If necessary, the process can be repeated.

HOW TO KEEP THERMOSTATIC MIXERS IN OPTIMAL CONDITION?

For the thermostatic mixer to operate correctly, run the mixer once every two weeks, spanning the full temperature range – from very cold water to the maximum hot water setting. Repeat the operation several times.

HOW TO TAKE CARE OF A SHOWER HEAD?

Remember to regularly wipe the silicone nozzles with your hand to remove any limescale deposits that might be forming on their surface. Avoid using harsh cleaning agents that may damage the nozzles and the surface of the shower head.

The shower head should be angled after each use to allow the remaining water to flow out. This is the easiest yet necessary way to reduce the build-up of limescale from the water inside the shower head. Tilting the shower head additionally reduces the risk of the product becoming prone to leaking, allowing the product to serve its purpose reliably for an extended time.

WHAT IS THE BEST WAY TO CARE FOR A HAND SHOWER ?

Remember to regularly wipe the silicone nozzles with your hand to remove any limescale deposits that might be forming on their surface. A toothpick or toothbrush can also be used to clean the spaces in between if there is a considerable build-up of limescale.

For more stubborn dirt, it is recommended to immerse the hand shower in a 10% citric acid solution with water for about 10 minutes to soften the limescale and then wipe across the nozzles with a soft brush. It is not recommended to use rough or abrasive materials and corrosive or bleaching substances to prevent damaging the surface of the product. From time to time, it is recommended to unscrew the hand shower and flush it from the inside to remove any dirt preventing the flow of water.

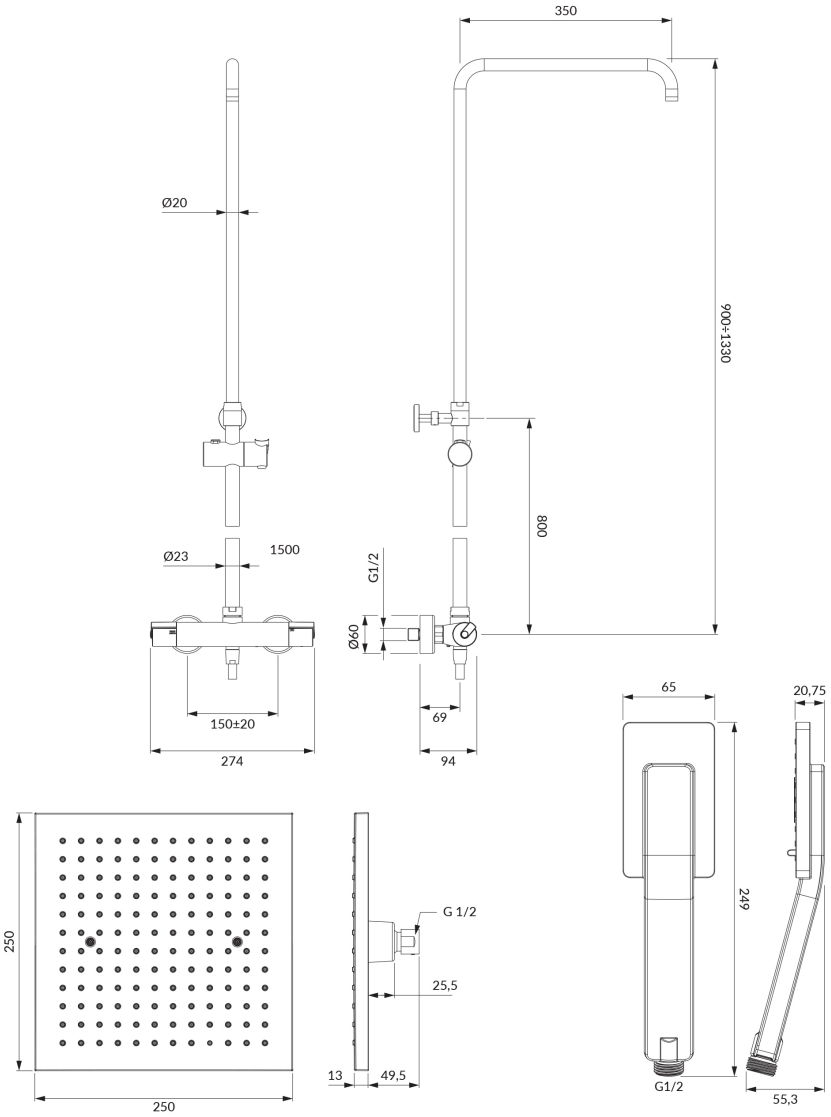
350
Ø20
900÷1330
800
Ø23
1500
G1/2
Ø60
150±20
274
69
94
65
20,75
250
G 1/2
25,5
249
13
49,5
G1/2
55,3
250