Product code: STFWC1R45-RWM
EAN: 5902539892949

OMNIRES

FLUSH SET | STRONGFRAME concealed frame for a wall-mounted toilet + STEEL-R45 stainless steel flush plate

Finish: matt white (WM)



The set comprising the concealed OMNIRES STRONGFRAME system and the OMNIRES STEEL-R45 flush plate is designed for bathroom interiors where durability, precision craftsmanship and refined aesthetics are essential. The one-piece concealed cistern ensures complete leak-tightness, while the integrated insulation reduces condensation, dampens noise, and absorbs vibrations, providing a high level of comfort and discretion during everyday use.

Thanks to precise adjustment options, the system enables efficient water saving – from as little as 3 litres for a small flush or 6 litres for a large flush – without compromising performance.

The OMNIRES STEEL-R45 dual flush plate combines meticulous detailing, durable materials, and exceptional everyday comfort of use. Made of high-quality stainless steel, it offers outstanding resistance to impact, pressure and cleaning agents. Its carefully finished, pleasant-to-the-touch surface retains its elegant appearance and performance over time. The contemporary design integrates seamlessly with the wall surface, while the softly rounded buttons and perfectly balanced proportions ensure effortless operation. Intuitive markings allow easy selection of the appropriate flush volume, supporting water efficiency and comfort with every use.

The flush plate comes in a matt white finish – a universal shade with a velvety, soft-touch surface.

Certificates: European Declaration of Performance (CE marking)

Technologies

Thanks to the innovative flushing technology, the water consumption is minimised.

The flush plate, made of high quality stainless steel, features a perfectly crafted design and exceptional resistance to damage, preserving its appearance even after years of use.

Specification

- STRONGFRAME concealed frame for drywall installation; height: 112 cm, width: 51 cm, frame depth: 12.5 cm, installation depth: 12.5-25 cm
- can be installed in front of a wall or inside a stud wall
- for a wall-mounted toilet bowl with a fixing bolt distance of 180 mm or 230 mm
- adjustable anchor feet with a locking system and a range of 0-20 cm
- sliding rail holder for the waste connector can be set to eight positions between 0 and 9.3 cm
- G 1/2” water connection with integrated G 3/8” angle valve
- water connection can either be at the back or at the top
- can be connected to external ventilation
- sound insulation mat included in the set
- integrated toilet freshener tablet compartment
- concealed system with a 9-litre cistern capacity and polystyrene insulation to prevent condensation on the tank surface and to dampen vibrations transmitted from the tank to the building structure
- flushing volume factory settings: 3 litres / 6 litres
- flushing water can be adjusted using the flushing valve: small flush 2.5-3.5 litres / large flush 6-9 litres
- dual flush plate STEEL-R45 made of stainless steel; dimensions: 24.5 x 16.5 cm

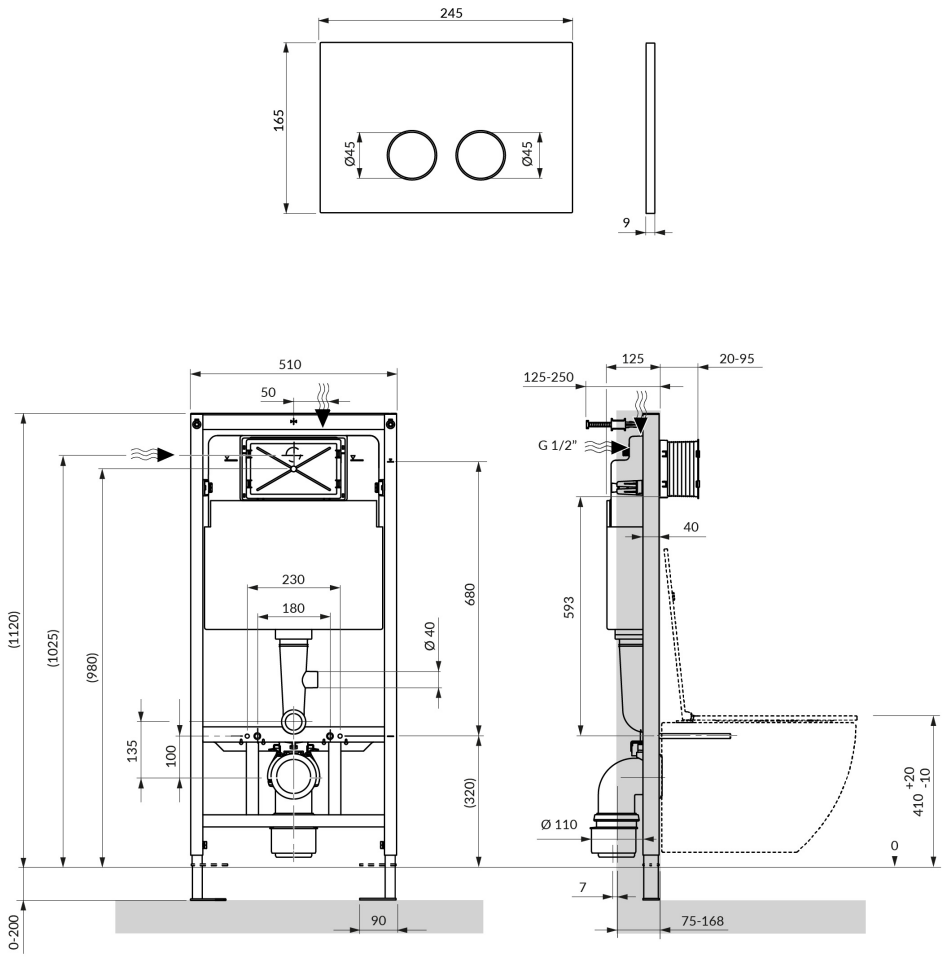
245
165
Ø45
Ø45
9
510
50
230
180
680
Ø 40
135
100
(320)
(1120)
(1025)
(980)
0-200
90
125
125-250
20-95
G 1/2"
40
593
Ø 110
+20
410 -10
0
7
75-168