Product code: CT8031AT
EAN: 5902539893311

OMNIRES

CONTOUR | bath mixer with shower set

Finish: brushed anthracite (AT)



The OMNIRES CONTOUR collection intrigues with its extravagant form and decorative details. An austere, architectural design with a diamond milling marvels with the sophisticated combination of textures and perfect workmanship.

Made of high grade brass, the mixer is equipped with a superior quality ceramic cartridge.

Anthracite is a modern finishing in a deep metallic shade, with a satin, brushed surface. The product is coated using the advanced PVD technology.

Design: Paulina Shacalis, OMNIRES
Awards: Red Dot Design Award, Must Have
Distinctions: Dobry Wzór

Certificates: Polish Declaration of Performance (B marking), Polish Hygienic Certificate PZH

Technologies

The mixer is equipped with the highest quality ceramic cartridge which ensures smooth and precise water flow control whilst guaranteeing long term product performance.

The product is coated using the advanced PVD technology which guarantees the highest possible durability and facilitates cleaning.

The EASY CLEAN nozzles allow the user to easily remove any limescale from the hand shower by simply wiping their silicone surface.

The mixer's body is made of high quality A-grade brass.

Flow characteristics

- working pressure 1-5 bar
- water flow at 3 bar: 25.3 l/min

Specification

- spout reach: 19,4 cm
- brass hand shower, 1-function
- stainless steel flexible shower hose, length: 150 cm
- brass hand shower bracket

Product care

HOW TO TAKE CARE OF BATHROOM AND KITCHEN FITTINGS?

You should clean your bathroom and kitchen fittings regularly, preferably after each use, so as to prevent the build-up of hard-to-remove dirt. For daily maintenance of external surfaces, use a soft cloth (for example, a microfibre cloth) and a solution of water with a mild cleaning agent with a natural composition. Hard-to-reach recesses and milled details can be gently cleaned with a soft brush. Then rinse the product thoroughly with clean water and wipe it dry. It is not recommended to use rough or abrasive materials and corrosive or bleaching substances to prevent damaging the surface of the product.

For more stubborn dirt, use a 10% citric acid solution with water. Apply this solution directly to the product or cover the product with a cloth soaked in the solution. After 10 minutes, rinse the product thoroughly with clean water and wipe it dry. If necessary, the process can be repeated.

WHAT IS THE BEST METHOD FOR CLEANING THE AERATOR?

Remember to regularly control the flow of water through the aerator so as to ensure its problem-free operation and protect it from damage. In the case of small contaminants in the water or “hard” water, remove the aerator once every few weeks and clean it with a brush. In the case of more stubborn dirt, we recommend soaking the aerator for 10 minutes in a 10% citric acid solution with water.

WHAT IS THE BEST WAY TO CARE FOR A HAND SHOWER ?

Remember to regularly wipe the silicone nozzles with your hand to remove any limescale deposits that might be forming on their surface. A toothpick or toothbrush can also be used to clean the spaces in between if there is a considerable build-up of limescale.

For more stubborn dirt, it is recommended to immerse the hand shower in a 10% citric acid solution with water for about 10 minutes to soften the limescale and then wipe across the nozzles with a soft brush. It is not recommended to use rough or abrasive materials and corrosive or bleaching substances to prevent damaging the surface of the product. From time to time, it is recommended to unscrew the hand shower and flush it from the inside to remove any dirt preventing the flow of water.

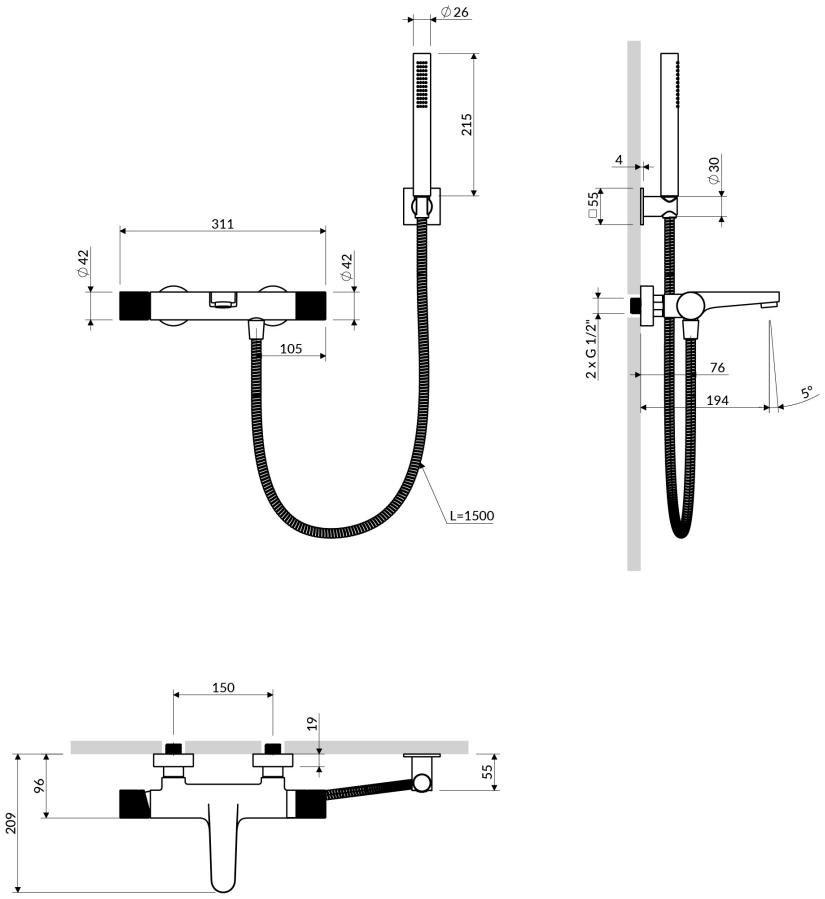
∅26
215
311
∅42
∅42
105
L=1500
4
∅30
□55
2 x G 1/2"
76
194
5°
150
19
96
55
209