Product code: FR7135CR
EAN: 5908223789854

OMNIRES

FRESH | 2-way shower/bath mixer for concealed installation

Finish: polished chrome (CR)

The OMNIRES FRESH collection constitutes the essence of minimalism. The design, inspired primarily by architecture, is based on structures with distinctive contours. The collection marvels with precisely defined edges, responsible for its unique, distinctive look.

Made of high grade brass, the mixer is equipped with a superior quality ceramic cartridge.

Chrome is a versatile finishing in a silvery colour, with the perfectly even and lustrous surface.

Design: Martin Yong

Certificates: Polish Declaration of Performance (B marking), Polish Hygienic Certificate PZH

Technologies

The mixer is equipped with the highest quality ceramic cartridge which ensures smooth and precise water flow control whilst guaranteeing long term product performance.

The product's coating, made using advanced galvanization technology, is durable and easy to clean.

The mixer's body is made of high quality A-grade brass.

Flow characteristics

- water flow at 3 bar: 24 l/min
- hot water supply: max. 90 °C
- working pressure 1-5 bar
- acoustic group: II/II

Specification

- rosette dimensions: 11 x 16 cm
- minimum wall depth: 6 cm
- two 1/2" inlets (cold and hot water), two 1/2" outlets for mixed water
- built-in parts included

Product care

HOW TO TAKE CARE OF BATHROOM AND KITCHEN FITTINGS?

You should clean your bathroom and kitchen fittings regularly, preferably after each use, so as to prevent the build-up of hard-to-remove dirt. For daily maintenance of external surfaces, use a soft cloth (for example, a microfibre cloth) and a solution of water with a mild cleaning agent with a natural composition. Hard-to-reach recesses and milled details can be gently cleaned with a soft brush. Then rinse the product thoroughly with clean water and wipe it dry. It is not recommended to use rough or abrasive materials and corrosive or bleaching substances to prevent damaging the surface of the product.
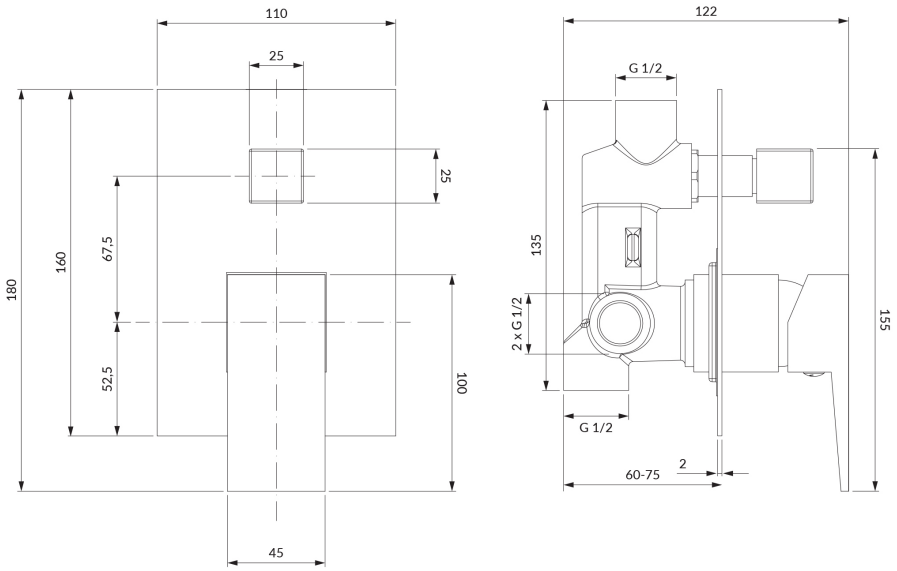
For more stubborn dirt, use a 10% citric acid solution with water. Apply this solution directly to the product or cover the product with a cloth soaked in the solution. After 10 minutes, rinse the product thoroughly with clean water and wipe it dry. If necessary, the process can be repeated.