Product code: CT8045AT
EAN: 5902539834079

OMNIRES

# CONTOUR | 1-way shower mixer for concealed installation

**Finish: brushed anthracite (AT)**

The OMNIRES CONTOUR collection intrigues with its extravagant form and decorative details. An austere, architectural design with a diamond milling marvels with the sophisticated combination of textures and perfect workmanship.

Made of high grade brass, the mixer is equipped with a superior quality ceramic cartridge.

Anthracite is a modern finishing in a deep metallic shade, with a satin, brushed surface. The product is coated using the advanced PVD technology.

Design: Paulina Shacalis, OMNIRES
Awards: Red Dot Design Award, Must Have
Distinctions: Dobry Wzór

Certificates: Polish Declaration of Performance (B marking)

## Technologies

The mixer is equipped with the highest quality ceramic cartridge which ensures smooth and precise water flow control whilst guaranteeing long term product performance.

The product is coated using the advanced PVD technology which guarantees the highest possible durability and facilitates cleaning.

The mixer's body, the valve and the rosette are all made of high quality A-grade brass.

## Flow characteristics

- hot water supply: max. 90 °C
- working pressure 1-5 bar
- acoustic group: N

## Specification

- rosette dimensions: 7 x 7 cm
- minimum wall depth: 5 cm
- two 1/2” inlets (hot and cold water), one 1/2” outlet for mixed water
- built-in parts included

## Product care

HOW TO TAKE CARE OF BATHROOM AND KITCHEN FITTINGS?

You should clean your bathroom and kitchen fittings regularly, preferably after each use, so as to prevent the build-up of hard-to-remove dirt. For daily maintenance of external surfaces, use a soft cloth (for example, a microfibre cloth) and a solution of water with a mild cleaning agent with a natural composition. Hard-to-reach recesses and milled details can be gently cleaned with a soft brush. Then rinse the product thoroughly with clean water and wipe it dry. It is not recommended to use rough or abrasive materials and corrosive or bleaching substances to prevent damaging the surface of the product.
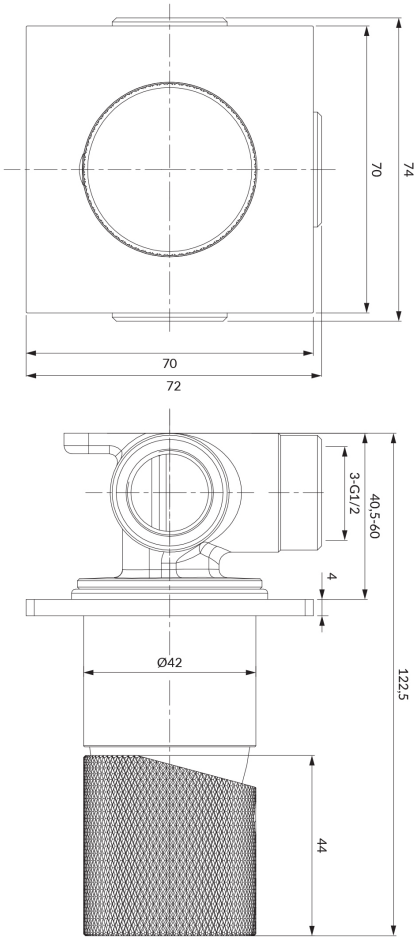
For more stubborn dirt, use a 10% citric acid solution with water. Apply this solution directly to the product or cover the product with a cloth soaked in the solution. After 10 minutes, rinse the product thoroughly with clean water and wipe it dry. If necessary, the process can be repeated.