Product code: AL53620CR
EAN: 5902539812015

OMNIRES

ART LINE | wall-mounted toilet brush

Finish: polished chrome (CR)

ART LINE accessories collection is characterized by slender contours, delicate lines and sophisticated details. It is distinguished by classic, stylized elements, kept in a romantic aesthetics.

Chrome is a versatile finishing in a silvery colour, with the perfectly even and lustrous surface.



Technologies

The product's coating, made using advanced galvanization technology, is durable and easy to clean.

The product is made of high quality A-grade brass.

Specification

- wall-mounted
- brass and frosted glass
- width: 12 cm, height: 37 cm, distance from the wall: 17 cm

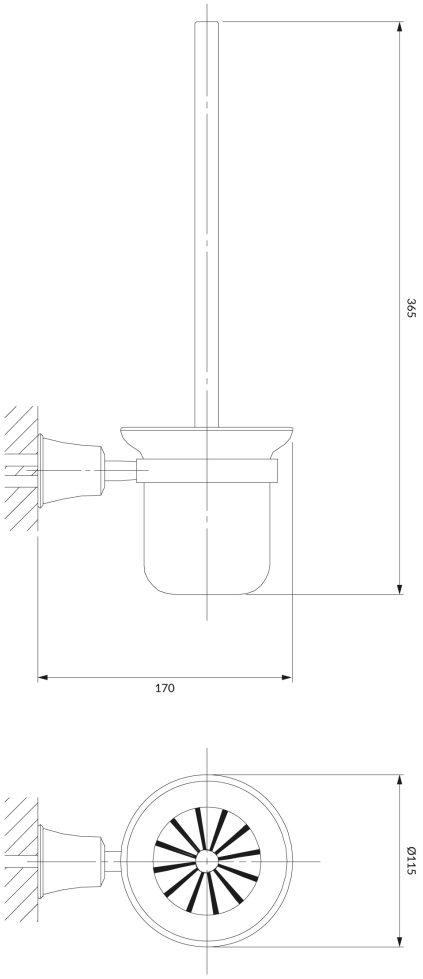
365
170
Ø115