Product code: 8819CR
EAN: 5908223785139

OMNIRES

LEGS | universal legs for bath mixers

Finish: polished chrome (CR)

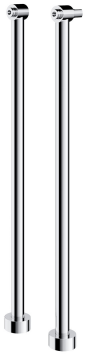

Technologies

The product is made of high quality A-grade brass.

Flow characteristics

- working pressure 1-5 bar

Specification

- for bath and shower mixers
- enable to create floor-standing bath mixer
- legs height: 84 cm
- 3/4” mixer connection
- with hand shower bracket

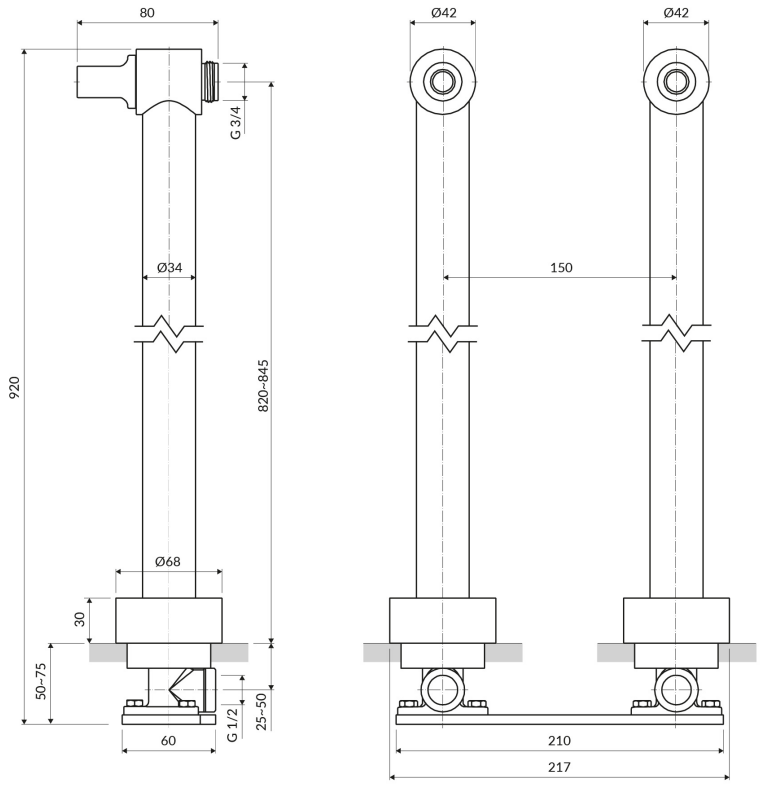
80
G 3/4
Ø34
920
820–845
Ø68
30
50–75
G 1/2
25–50
60
Ø42
Ø42
150
210
217