Product code: STFWC1M-RCP
EAN: 5902539890181

OMNIRES

FLUSH SET | STRONGFRAME concealed frame for a wall-mounted toilet + MINIMAL flush plate

Finish: polished copper (CP)



The set, comprising the concealed OMNIRES STRONGFRAME system and the OMNIRES MINIMAL flush plate, has been designed for contemporary bathrooms, where aesthetics and functionality are perfectly aligned. The concealed cistern, crafted from a single element, ensures complete leak-tightness, while the applied insulation reduces condensation, dampens noise, and minimises vibrations – delivering the highest level of comfort and discretion in everyday use.

Thanks to precise adjustment options, the frame allows to save water – water use is from as little as 2.5 l on a small flush and 6 l on a large flush – without loss of functional efficiency.

The OMNIRES MINIMAL dual flush plate has been engineered for simple, intuitive installation. Its slim profile integrates seamlessly with the wall, while the rounded buttons and perfectly balanced proportions ensure exceptional comfort in daily use. Clear, intuitive markings make it easy to select the required flush volume, tailored to individual needs, promoting water savings with every flush.

The flush plate comes in a copper finish – a noble, warm reddish-brown shade with a perfectly smooth, glossy surface, crafted using advanced PVD technology.

Technologies

The flush plate is coated using advanced PVD technology, which guarantees the highest possible durability and facilitates cleaning.

Specification

- STRONGFRAME concealed frame for drywall installation; height: 112 cm, width: 51 cm, frame depth: 12.5 cm, installation depth: 12.5–25 cm
- can be installed in front of a wall or inside a stud wall
- for a wall-mounted toilet bowl with a fixing bolt distance of 180 mm or 230 mm
- adjustable anchor feet with a locking system and a range of 0–20 cm
- sliding rail holder for the waste connector can be set to eight positions between 0 and 9.3 cm
- G 1/2” water connection with integrated G 3/8” angle valve
- water connection can either be at the back or at the top
- can be connected to external ventilation
- sound insulation mat included in the set
- integrated toilet freshener tablet compartment
- concealed system with a 9-litre cistern capacity and polystyrene insulation to prevent condensation on the tank surface and to dampen vibrations transmitted from the tank to the building structure
- flushing volume factory settings: 3 litres / 6 litres
- flushing water can be adjusted using the flushing valve: small flush 2.5–3.5 litres / large flush 6–9 litres
- dual flush plate MINIMAL made of ABS plastic; dimensions: 24.5 x 16.5 cm

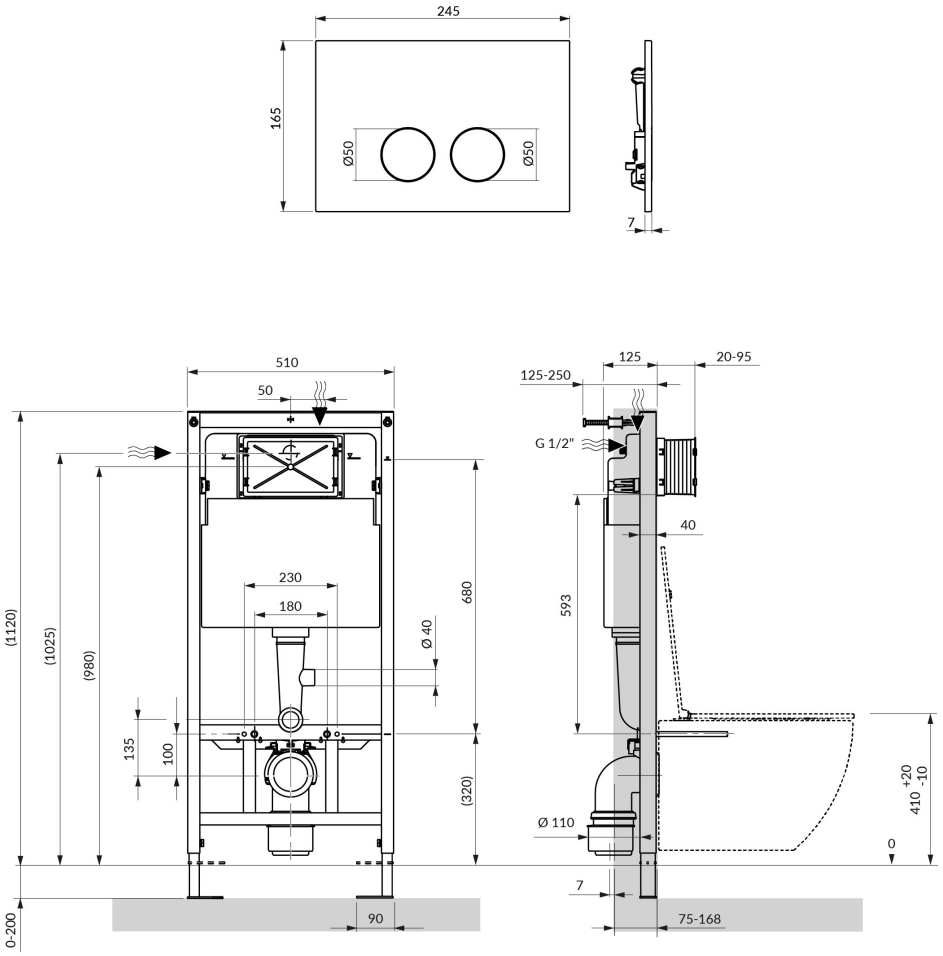
245
165
Ø50
Ø50
7
510
50
230
180
680
Ø 40
(1120)
(1025)
(980)
135
100
(320)
0-200
90
125
125-250
20-95
G 1/2"
40
593
+20
410 -10
0
Ø 110
7
75-168