Product code: AL53420ORB
EAN: 5902539811667

OMNIRES

ART LINE | soap dish

Finish: brushed antique copper (ORB)

ART LINE accessories collection is characterized by slender contours, delicate lines and sophisticated details. It is distinguished by classic, stylized elements, kept in a romantic aesthetics.

Antique copper is an expressive finishing in a red-brown shade, with brushed texture and vintage character.



Technologies

The product is made of high quality A-grade brass.

Specification

- wall-mounted
- brass and glass
- width: 11 cm, height: 5 cm, distance from the wall: 16 cm

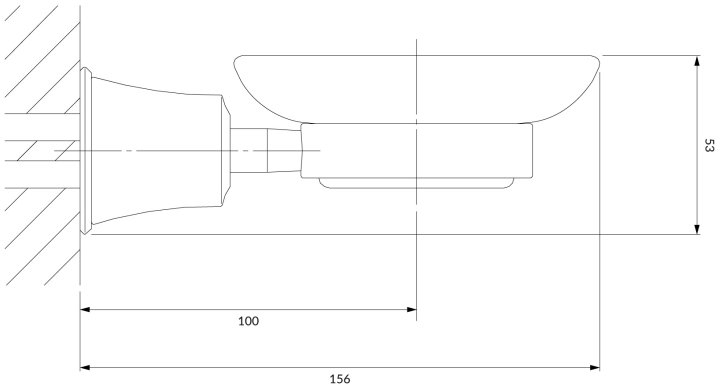
53
100
156

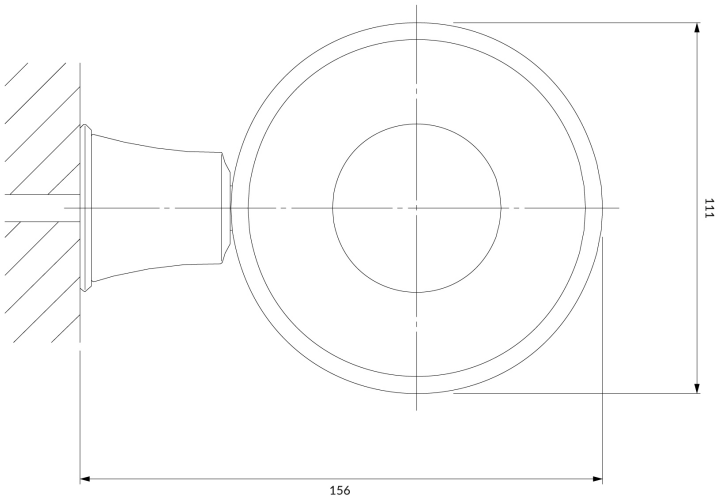
111
156