Product code: Y1247ROGR
EAN: 5902539889796

OMNIRES

Y | exposed element for 2-way shower mixer for concealed installation

Finish: brushed graphite (GR)



The OMNIRES Y collection thrills with its simple line and an impeccable form which expresses the passion in pursuit for the ideal. The design has been inspired by and based on the shape of a circle. Its timeless and perfectly refined design, created in the spirit of minimalism, offers the maximum of interior design options.

To complete the shower mixer, it is necessary to additionally purchase the built-in part: BOX47X, equipped with a brass body and a high-quality ceramic cartridge.

Graphite is an intriguing finishing in the shade of metallic grey, with a satin, brushed surface.

Design: Janusz Langner, OMNIRES

Technologies

The mixer's body is made of high quality A-grade brass.

Flow characteristics

- hot water supply: max. 90 °C
- working pressure 1-5 bar

Specification

- rosette dimensions: ø16.8 cm
- complementary product to built-in part BOX47X

Product care

HOW TO TAKE CARE OF BATHROOM AND KITCHEN FITTINGS?

You should clean your bathroom and kitchen fittings regularly, preferably after each use, so as to prevent the build-up of hard-to-remove dirt. For daily maintenance of external surfaces, use a soft cloth (for example, a microfibre cloth) and a solution of water with a mild cleaning agent with a natural composition. Hard-to-reach recesses and milled details can be gently cleaned with a soft brush. Then rinse the product thoroughly with clean water and wipe it dry. It is not recommended to use rough or abrasive materials and corrosive or bleaching substances to prevent damaging the surface of the product.

For more stubborn dirt, use a 10% citric acid solution with water. Apply this solution directly to the product or cover the product with a cloth soaked in the solution. After 10 minutes, rinse the product thoroughly with clean water and wipe it dry. If necessary, the process can be repeated.

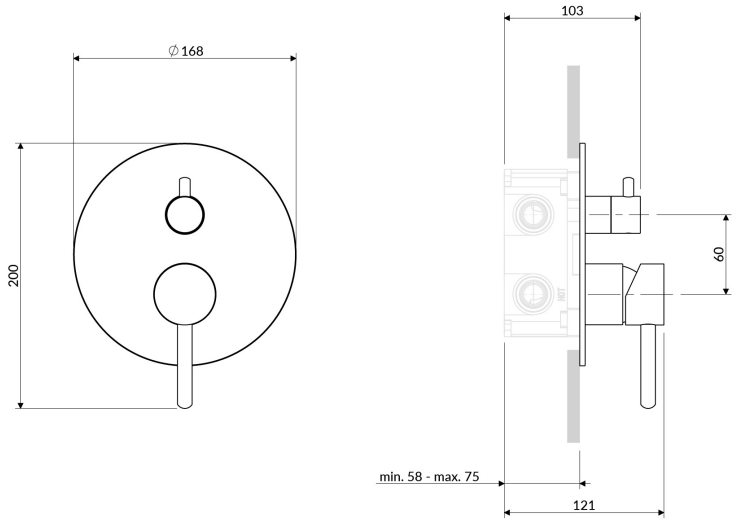
∅168
200
103
60
min. 58 - max. 75
121

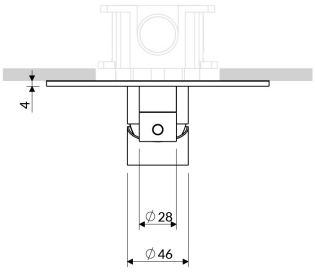
4
∅28
∅46