Product code: S29CR
EAN: 5908223789953

OMNIRES

BODY JET | body jet for concealed installation

Finish: chrome (CR)

Certificates: Polish Declaration of Performance (B marking), Polish Hygienic Certificate PZH

Technologies

The EASY CLEAN nozzles allow the user to easily remove any limescale build up by simply wiping their silicone surface.

The FLEXI JET system allows the user to precisely adjust the direction of the jet's water flow.

Flow characteristics

- water flow at 3 bar: 9 l/min
- noise class: I

Specification
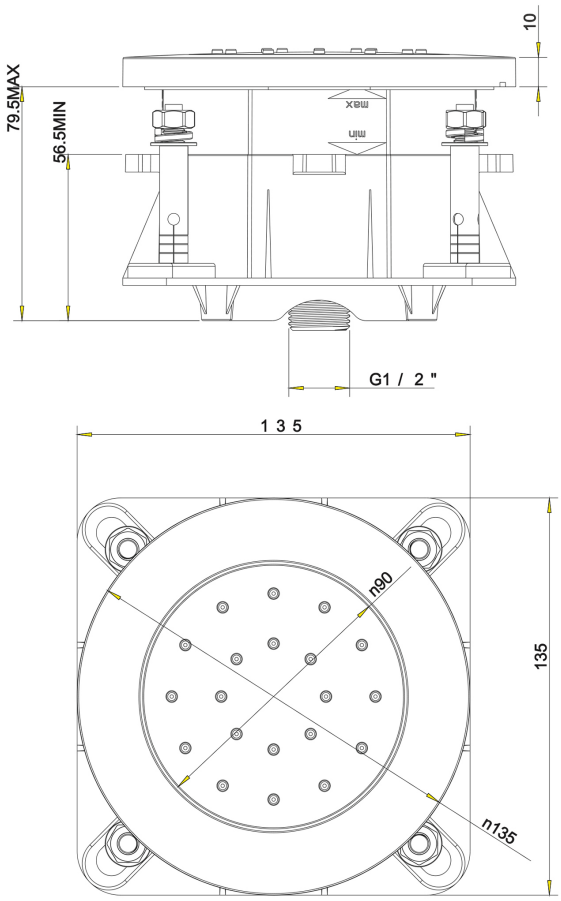
- dimensions: ø13.5 cm
- 1-function
- 1/2" water connection
- minimum wall depth: 5.7 cm
- flow rate: 8.39 l/min. (3 bar pressure)