Product code: SYOM-W10CR
EAN: 5908223789168

OMNIRES

TRAP | bath trap, decorative

Finish: chrome (CR)

Recommended for OMNIRES Marble+ baths.

Certificates: Polish Declaration of Performance (B marking)

Specification

- brass
- for bath without overflow with ø5.2 cm drain diameter
- cover dimensions: ø7cm, click-clack
- distance between the drain hole and connection to sewer: 13 cm
- connection height: 22 cm

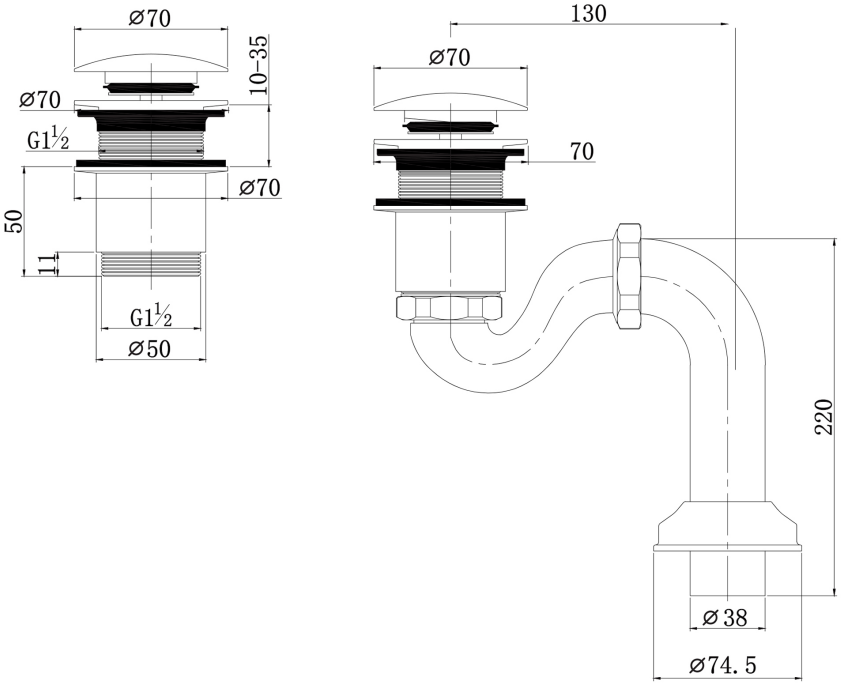
ø70
10-35
ø70
G1½
ø70
50
11
G1½
ø50
130
ø70
70
220
ø38
ø74.5