Product code: CT8037-1GLB
EAN: 5902539834123

OMNIRES

CONTOUR | 5-hole bath mixer for concealed installation

Finish: brushed gold (GLB)

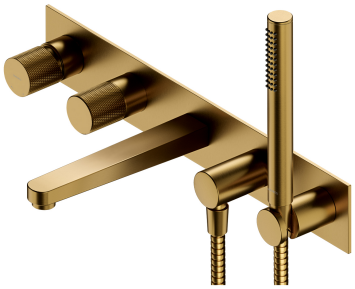

The OMNIRES CONTOUR bath mixer for concealed installation with integrated hand shower intrigues with its extravagant form and decorative details. An austere, architectural design with a diamond milling marvels with the sophisticated combination of textures and perfect workmanship. Thanks to its symmetric form, the bath mixer and the bath are perfectly tuned, creating a harmonious composition. The concealed installation guarantees the economy of space and the ease of cleaning.

Made of high grade brass, the mixer is equipped with a superior quality ceramic cartridge.

Brushed gold is a noble finishing in an elegant shade, with a contemporary, satin surface. The product is coated using the advanced PVD technology.

Design: Paulina Shacalis, OMNIRES
Awards: Red Dot Design Award, Must Have
Distinctions: Dobry Wzór

Technologies

The mixer is equipped with the highest quality ceramic cartridge which ensures smooth and precise water flow control whilst guaranteeing long term product performance.

The EASY CLEAN nozzles allow the user to easily remove any limescale from the shower head, the hand shower and the body jet by simply wiping their silicone surface.

The product is coated using the advanced PVD technology which guarantees the highest possible durability and facilitates cleaning.

The mixer's body, the valve and the rosette are all made of high quality A-grade brass.

Flow characteristics

- water flow at 3 bar: 26 l/min
- hot water supply: max. 90 °C
- working pressure 1-5 bar

Specification

- rosette dimensions: 48 x 8 cm
- spout reach: 20.5 cm
- minimum wall depth: 7 cm
- two 1/2” inlets (hot and cold water)
- brass hand shower, 1-function
- stainless steel flexible shower hose, length: 125 cm
- built-in parts included

Product care

HOW TO TAKE CARE OF BATHROOM AND KITCHEN FITTINGS?

You should clean your bathroom and kitchen fittings regularly, preferably after each use, so as to prevent the build-up of hard-to-remove dirt. For daily maintenance of external surfaces, use a soft cloth (for example, a microfibre cloth) and a solution of water with a mild cleaning agent with a natural composition. Hard-to-reach recesses and milled details can be gently cleaned with a soft brush. Then rinse the product thoroughly with clean water and wipe it dry. It is not recommended to use rough or abrasive materials and corrosive or bleaching substances to prevent damaging the surface of the product.

For more stubborn dirt, use a 10% citric acid solution with water. Apply this solution directly to the product or cover the product with a cloth soaked in the solution. After 10 minutes, rinse the product thoroughly with clean water and wipe it dry. If necessary, the process can be repeated.

WHAT IS THE BEST WAY TO CARE FOR A HAND SHOWER ?

Remember to regularly wipe the silicone nozzles with your hand to remove any limescale deposits that might be forming on their surface. A toothpick or toothbrush can also be used to clean the spaces in between if there is a considerable build-up of limescale.

For more stubborn dirt, it is recommended to immerse the hand shower in a 10% citric acid solution with water for about 10 minutes to soften the limescale and then wipe across the nozzles with a soft brush. It is not recommended to use rough or abrasive materials and corrosive or bleaching substances to prevent damaging the surface of the product. From time to time, it is recommended to unscrew the hand shower and flush it from the inside to remove any dirt preventing the flow of water.

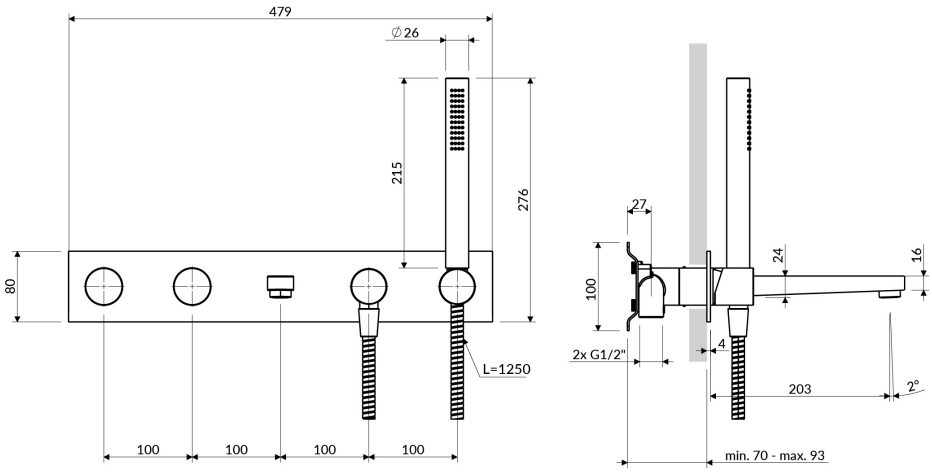
479
∅26
215
276
80
L=1250
100
100
100
100
27
24
16
100
2x G1/2"
4
203
2°
min. 70 - max. 93

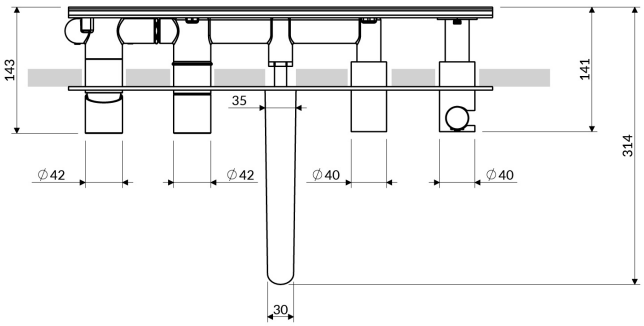
143
141
35
314
∅42
∅42
∅40
∅40
30