Product code: Y1235GLB
EAN: 5902539836608

OMNIRES

Y | 2-way shower/bath mixer for concealed installation

Finish: brushed gold (GLB)

The OMNIRES Y collection thrills with its simple line and an impeccable form which expresses the passion in pursuit for the ideal. The design has been inspired by and based on the shape of a circle. Its timeless and perfectly refined design, created in the spirit of minimalism, offers the maximum of interior design options.

Made of high grade brass, the mixer is equipped with a superior quality ceramic cartridge.

Brushed gold is a noble finishing in an elegant shade, with a contemporary, satin surface. The product is coated using the advanced PVD technology.

Design: Janusz Langner, OMNIRES

Certificates: Polish Declaration of Performance (B marking), Polish Hygienic Certificate PZH

Technologies

The mixer is equipped with the highest quality ceramic cartridge which ensures smooth and precise water flow control whilst guaranteeing long term product performance.

The product is coated using the advanced PVD technology which guarantees the highest possible durability and facilitates cleaning.

The mixer's body, the valve and the rosette are all made of high quality A-grade brass.

Flow characteristics

- water flow at 3 bar: 24 l/min
- hot water supply: max. 90 °C
- working pressure 1-5 bar
- acoustic group: I/I

Specification

- rosette dimensions: ø17 cm
- minimum wall depth: 5 cm
- two 1/2” inlets (cold and hot water), two outlets for mixed water: 1/2” and 3/4”
- ceramic cartridge: ø40 mm
- built-in parts included

Product care

HOW TO TAKE CARE OF BATHROOM AND KITCHEN FITTINGS?

You should clean your bathroom and kitchen fittings regularly, preferably after each use, so as to prevent the build-up of hard-to-remove dirt. For daily maintenance of external surfaces, use a soft cloth (for example, a microfibre cloth) and a solution of water with a mild cleaning agent with a natural composition. Hard-to-reach recesses and milled details can be gently cleaned with a soft brush. Then rinse the product thoroughly with clean water and wipe it dry. It is not recommended to use rough or abrasive materials and corrosive or bleaching substances to prevent damaging the surface of the product.
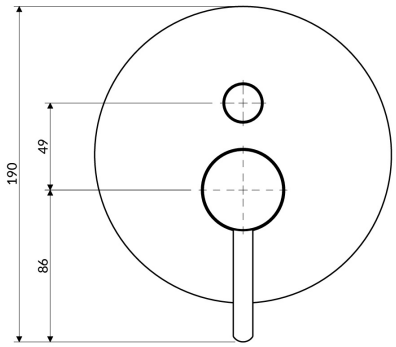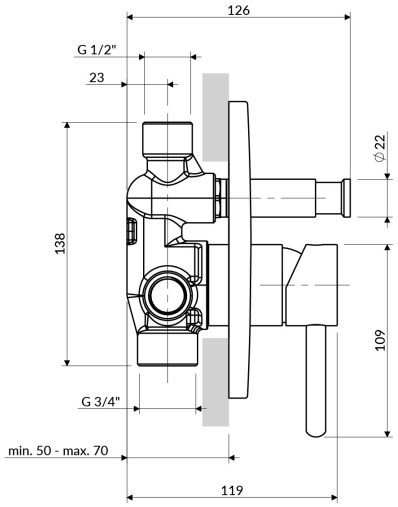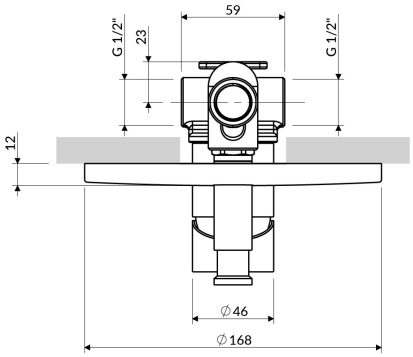
For more stubborn dirt, use a 10% citric acid solution with water. Apply this solution directly to the product or cover the product with a cloth soaked in the solution. After 10 minutes, rinse the product thoroughly with clean water and wipe it dry. If necessary, the process can be repeated.